SY35U

MINI HYDRAULIC
EXCAVATOR

8,444 LBS OPERATING WEIGHT
23.2 HP GROSS HORSEPOWER
11 FT MAX DIGGING DEPTH

SANY



BUILT **FOR TIGHT**
VERSATILITY

EASY TO **OWN, O**

PERATE, & SERVICE

INDUSTRY'S STRONGEST STANDARD WARRANTY | 5-YEAR* 5,000 HOURS

*Warranty applies to 2026 Excavator and Wheel Loader models

MADE FOR AMERICAN OPERATORS

In a quiet suburban neighborhood in Florida, a hardworking landscaper depends on his SANY SY35U to install new drainage systems, dig footings for patios, and handle tight-space trenching for irrigation around homes and gardens. Every job matters, and his mini excavator is built to handle them all. The proven Yanmar engine and load-sensing hydraulics give him the power and control he needs, while the 5-year/5,000-hour warranty protects his investment with every hour of work. With support from his local dealer and the SANY America team, he knows his machine will be ready when the job demands it. For landscapers like him, SANY provides critical tools he depends on to get the toughest work done.









U | ZERO TAIL SWING DESIGN (U)

The SY35U features a true zero tail swing design without a bolt-on counterweight, delivering powerful digging and lifting performance within an extremely compact footprint. An optional bolt-on counterweight adds balance and lifting stability when needed, giving operators flexibility to match the machine to the job while working confidently in space-restricted areas.

| QUICK COUPLER COMPATIBLE

The SY35U comes standard with factory quick-coupler plumbing and cab controls, with OEM couplers available through your local SANY dealer. This makes adding a coupler less expensive, easy, and fully integrated. Couplers improve jobsite efficiency, simplify transport, and increase versatility, giving you more capability from the same machine.

| COMPONENTS YOU TRUST

The SY35U is built with components by brands you know and trust. From Yanmar to Hengli, you're getting a machine made with familiar, proven, reliable systems that offer ample support. It's an ecosystem of dependable components that make ownership easier.

| ANGLE BLADE OPTION

The SY35U comes standard with a heavy-duty 4-way angle backfill blade for pushing spoil piles, backfilling trenches, and rough grading. Blade float allows the blade to follow ground contours for smoother results, while the angled blade provides a more stable working platform when digging and lifting, improving control and confidence.

| AUXILLARY HYDRAULICS

The SY35U Includes factory-installed auxiliary hydraulics: a high-flow primary circuit and a secoundary circuit. The primary circuit supports one-way flow, two-way flow and continuous flow. All auxiliary flow settings are easily adjustable from the cab display.

6,830+

FOOT POUNDS

Bucket breakout force.

A MACHINE THAT'S EASY TO OWN

The SY35U delivers outstanding versatility in a compact package, providing operators with a responsive, job-ready machine designed for efficiency in tight working environments. Available with an optional 4-way angle blade, it offers improved control for grading and backfilling tasks while maintaining the small footprint contractors and landscapers rely on. Easy to move between jobs with a heavy-duty pickup and trailer, the SY35U is a dependable solution for smaller projects that still demand serious capability. With factory-installed quick-coupler plumbing and auxiliary hydraulic circuits, attachment swaps are fast and seamless, expanding what the machine can handle without added complication. Supported by proven, trusted components and built for lasting durability, the SY35U delivers confidence over the long haul. Its strong, stable chassis is engineered for safe performance in confined spaces, helping operators stay productive while keeping ownership simple day after day.

RELIABLE FROM THE INSIDE OUT

Long workdays, operator protection, and consistent profitability depend on having equipment you can count on, and the SY35U is designed to meet that standard. Built for thousands of hours of dependable performance in tough, confined jobsite environments, it brings durability and confidence to every task. Its heavy-duty frame is engineered to withstand repeated digging and lifting stress, while the hydraulic system delivers smooth, consistent pressure and strong working force throughout the day. The powertrain is designed for nonstop operation, keeping hydraulic performance steady shift after shift. Every aspect of the machine is focused on maximizing uptime, improving efficiency, and driving real productivity on the job. Backed by a standard 5-year / 5,000-hour warranty, the SY35U offers proven reliability that helps keep projects on track and operations moving forward.



STRUCTURAL INTEGRITY

SANY machines don't cut corners on steel. We build each machine with the material it needs to deliver strength, stability and durability. Reinforced booms and sticks with internal ribbing add stiffness and rigidity, while the reinforced X-frame undercarriage is built to take a beating on the toughest terrain. In our state-of-the-art factories, robotic welding and CNC cutting ensure every part fits properly and is welded to last. Strict quality control then confirms the structural integrity meets our standards before it ever reaches your jobsite.

HYDRAULIC SYSTEM

The SY35U uses a pilot-controlled hydraulic system giving operators a smooth, predictable feel at the controls. Its load-sensing hydraulics deliver fast cycle speeds, strong breakout forces and excellent lifting performance. Auxiliary hydraulic flow is easily adjustable from the cab display with a case drain included standard from the factory. And with Parker hydraulic components throughout, the system is built to handle the high stress and demanding work your projects require.

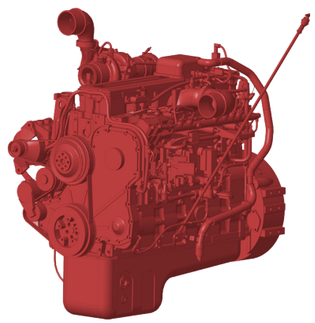

POWERTRAIN BY YANMAR

Powered by an Yanmar 3TNV88F diesel engine that meets or exceeds EPA emissions regulations, the SY35U provides the efficiency and compliance your business needs. With 23.2 hp at 2,200 rpm, it delivers the power and torque to run day and night on the most demanding jobsites. It's a powertrain you already know and trust—backed by a major support network—where parts, service and expertise are always within reach. That means more uptime, less worry and a machine that works as hard as you do.

23.2

HORSE POWER

Gross horse power @ 2,200 rpm by Yanmar 3TNV88F

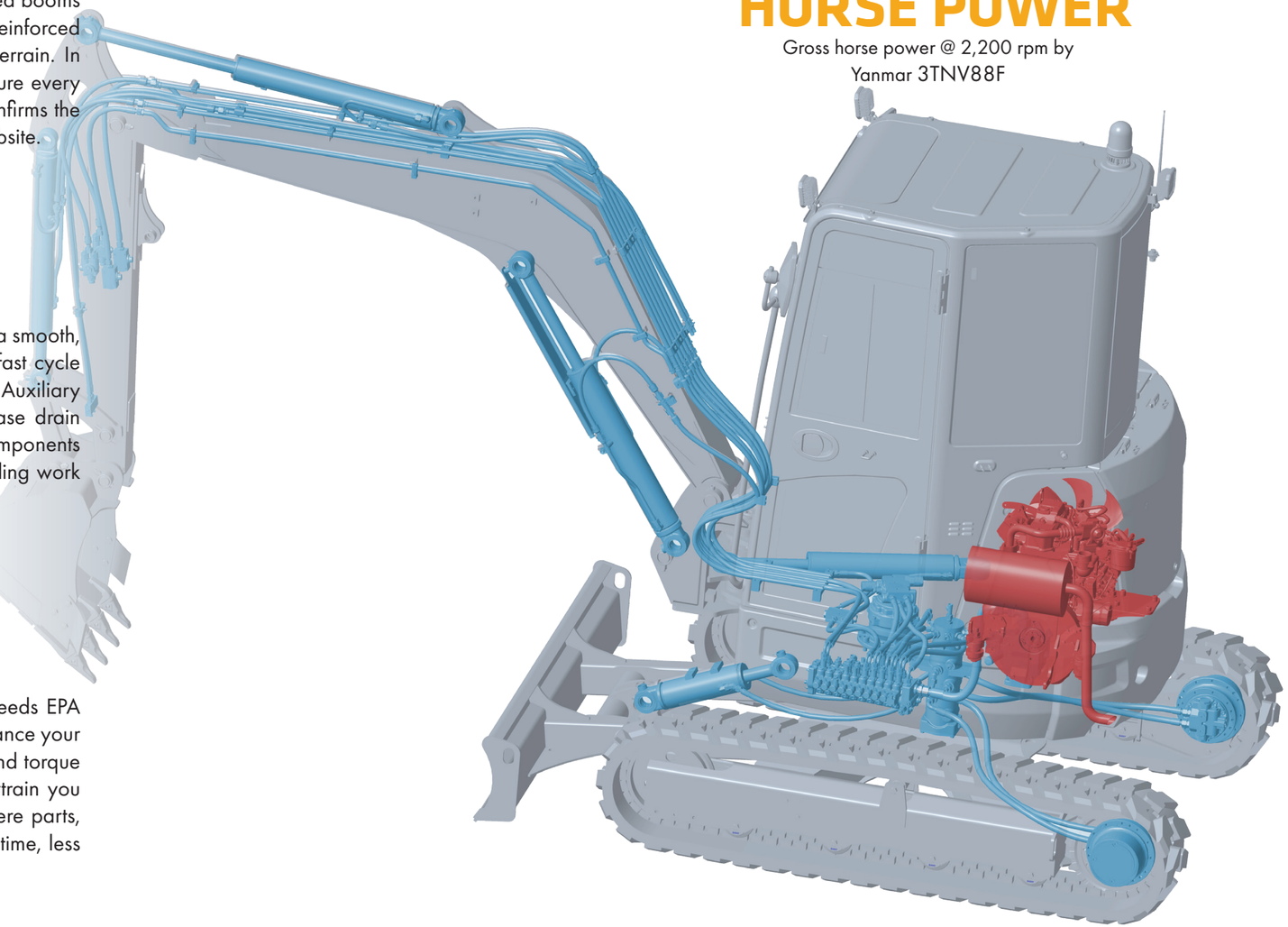



16+ FEATURES

specifically designed for operator and jobsite safety.

SAFETY PRIORITIZED

We design for safety first. Operators get secure handrails, steps, and antislip on top, OEM FOPS cab guarding, and a ROPS-verified cab with multiple exit points. A retractable seatbelt and emergency shut-off add protection inside, while alarms, and 360° lighting enhance awareness for a safer jobsite.

SY35U

MINI HYDRAULIC
EXCAVATOR

8,444 LBS OPERATING WEIGHT
23.2 HP GROSS HORSEPOWER
11” MAX DIGGING DEPTH

SANY

TECHNICAL SPECIFICATIONS

MACHINE DATA	CAB	CANOPY
Operating Weight*	8,444 lbs	8,223 lbs
Bolt-on Counterweight	441 lbs	441 lbs
Ground Pressure	4.9 psi	4.6 psi
Engine Model	3TNV88F	
Displacement	100.2 in^3	
Net Power	22.1 HP @ 2,200 rpm	
Gross Power	23.2 HP @ 2,200 rpm	
Hydraulics	Load Sensing with Pilot Control	
Main Hydraulic Pump	Axial Piston – Variable Displacement	
Operating Flow (Max)	23.2 gpm	
Operating Pressure (Max)	3,553 psi	
Auxiliary Flow	18.5 gpm	
Auxiliary Pressure	2,901 psi	
Travel Motor	Axial Piston with Park Brake	
Travel Pressure (Max)	3,553 psi	3,553 psi
Travel Speeds (Max)	2.6 / 1.5 mph	
Travel Effort (Max)	8,273 lbf	
Gradability	30°	
Swing Motor	Axial Piston with Swing Brake	
Swing Pressure (Max)	2,988 psi	
Swing Speed (Max)	10 RPM	
Undercarriage	Belted Rubber Track	
Track Shoe Width	12”	
Track Rollers	4 Per Side	
Carrier Rollers	1 Per Side	

WORKING SPECIFICATIONS

WORKING RANGE	STANDARD STICK	LONG STICK
Boom Length	8’ 4”	8’ 4”
Stick (Arm) Length	4’ 7”	5’ 5”
A Maximum Digging Height	16’	16’ 6”
B Maximum Dumping Height	11’ 4”	11’ 10”
C Maximum Digging Depth	10’ 3”	11’
D Maximum Vertical Wall Digging Depth	8’ 8”	9’ 5”
E Maximum Reach at Ground Level	17’ 7”	18’ 5”
F Minimum Swing Radius	8’ 1”	8’ 2”
DIGGING PERFORMANCE	**STANDARD STICK**	**LONG STICK**
Boom Length	8’ 4”	8’ 4”
Stick (Arm) Length	4’ 7”	5’ 5”
Bucket Breakout Force (ISO)	6,834 lbf	6,834 lbf
Stick (Arm) Digging Force (ISO)	4,092 lbf	3,642 lbf

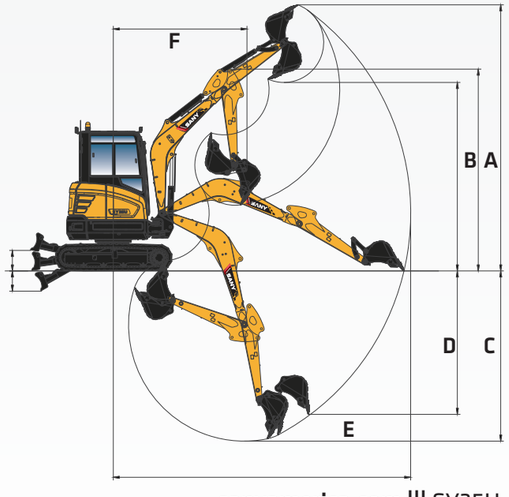

*Operating weight is for the SY35U with no attachments, and standard stick.

SANY America Inc. reserves the right to change these specifications at any time without prior notification. ©2026 SANY America Inc. HEXPS26SY35U001

MINI HYDRAULIC EXCAVATOR SY35U

STANDARD FEATURES

ENGINE
- Yanmar 3TNV88F
- Tier 4f / EU Stage V Ready
- Auto-idle
- Dual-element dry air filter
- Coolant Expansion tank
- EGR Valve
- Fan guard
- Engine coolant to –37 deg. C (–34 deg. F)
- Full-flow oil filter
- High flow cooling fan
- 500-hour engine-oil-change interval
- Fuel filter and water separator

HYDRAULIC SYSTEM
- Spring-applied, hydraulically released automatic swing brake
- Load sensing hydraulic system
- Control pattern change valve
- Primary auxiliary hydraulic circuit with flow diverter and 1 and 2-way piping
- Auxiliary hydraulic-flow adjustments through monitor
- Adjustable auxiliary pressure relief
- Quick coupler plumbing to end of the stick

UNDERCARRIAGE
- Planetary drive with axial piston motors
- Propel motor shields
- Spring-applied, hydraulically released automatic propel brake
- Track guides, front idler and 2 per side
- 2-speed travel selection through display and on dozer lever
- 4 lower track rollers each side
- 1 Upper carrier roller each side
- Dozer blade with float function and cylinder guarding
- Tie downs on track frame and dozer blade
- 300mm (12") wide rubber tracks
- 300mm (12") wide steel tracks
- Undercarriage frame opening guard

UPPERSTRUCTURE
- Right-hand, left-hand, and counterweight mirrors
- Lockable cab, hood, and service doors
- Debris screen in side panel
- Remote-mounted engine oil and fuel filters
- Daily fluid level inspection visible from ground
- Rear reflectors

ATTACHMENTS
- Convenient grease points
- Dirt seals on all bucket pins
- Flow diverter valve

ATTACHMENTS
- Thumb bracket
- Oil-impregnated bushings
- Reinforced thrust plates

OPERATOR'S STATION
- Hydraulic pilot controls for boom, stick, swing, and travel operations
- Proportional auxiliary switches on joystick
- Travel levers with foot pedals
- AM/FM radio with bluetooth and USB connection port
- Vinyl seat with fore/aft adjustment
- 2" retractable seat belt
- Emergency stop switch
- Sliding front window
- Removable lower front window
- Window breaker
- Standard and Breaker work mode
- 8 tool selection modes
- Fully adjustable auxiliary flow circuit from display
- Multifunction LCD monitor with: diagnostic capability / multiple-language
- System monitoring features: auto-idle indicator, 2-speed indicator, work tool mode indicator preheat icon, time and date, battery charge icon, throttle position, engine oil pressure alarm, fuel level gauge, maintenance needed icon, failure code, standard/breaker mode button, engine coolant temperature, coolant temp alarm, severe failure alarm, operating hours
- High performance heating, ventilation, and air conditioning system
- Operation and maintanence manual storage
- Heavy duty removeable rubber floor mat
- Front windshield wiper with high and low speed
- Horn, electric
- Hour meter, electric
- Hydraulic shutoff lever, all controls
- Interior light
- Cup holder
- Travel alarm with cancel switch
- Transparent overhead window

ELECTRICAL
- 12V electrical system
- Maintenance free battery
- Ground level battery disconnect
- Easy access fuse panel
- Terminal battery covers
- 80-amp alternator
- 12V power outlet

LIGHTS
- Work lights: 3 mounted on top of cab, 1 mounted on boom, magnetic beacon

In the interest of continual equipment development, SANY America Inc. reserves the right to change these specifications at any time without prior notification.
©2026 SANY America Inc. HEXPS26SY35U001

LIFTING PERFORMANCE

Standard 8' 4" Boom
Standard 4' 7" Stick
Standard 1' Track Shoes
No Bucket

Ratings are based on ISO 10567:2007. Lift capacity does not exceed 75% of tipping load with the machine on firm, level ground or 87% of hydraulic lifting capacity.

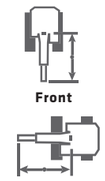

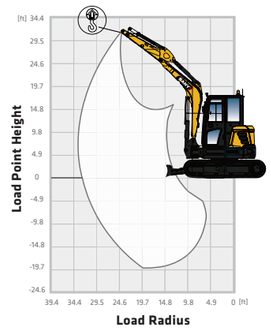

Standard 4' 7" Stick (Blade Up/Blade Down)

B (HEIGHT)	6.6 FT		9.8 FT		13.1 FT		MAX	
LOAD POINT HEIGHT								
13.1							*1,585 lbs	*1,446 lbs
							1,565 lbs	1,446 lbs
9.8					*1,479 lbs	1,107 lbs	*1,400 lbs	1,003 lbs
					1,193 lbs	1,003 lbs	1,082 lbs	1,003 lbs
6.6			*1,918 lbs	1,680 lbs	*1,603 lbs	1,078 lbs	*1,349 lbs	847 lbs
			1,825 lbs	1,680 lbs	1,164 lbs	847 lbs	915 lbs	847 lbs
3.3			*2,657 lbs	1,545 lbs	*1,861 lbs	1,027 lbs	*1,411 lbs	796 lbs
			1,687 lbs	1,545 lbs	1,111 lbs	796 lbs	860 lbs	796 lbs
0			*3,047 lbs	1,470 lbs	*2,035 lbs	990 lbs	*1,601 lbs	820 lbs
			1,603 lbs	1,470 lbs	1,074 lbs	820 lbs	886 lbs	820 lbs
-3.3	*5,095 lbs	2,751 lbs	*2,937 lbs	1,464 lbs	*1,907 lbs	990 lbs	*1,753 lbs	946 lbs
	3,091 lbs	2,751 lbs	1,603 lbs	1,464 lbs	1,074 lbs	946 lbs	1,025 lbs	946 lbs
-6.6	*3,574 lbs	2,848 lbs	*2,083 lbs	1,523 lbs			*1,744 lbs	1,373 lbs
	3,192 lbs	2,848 lbs	1,664 lbs	1,523 lbs			1,497 lbs	1,373 lbs

Standard 5' 5" Stick (Blade Up/Blade Down)

B (HEIGHT)	6.6 FT		9.8 FT		13.1 FT		MAX	
LOAD POINT HEIGHT								
13.1							*1,321 lbs	1,228 lbs
							*1,321 lbs	1,228 lbs
9.8					*1,296 lbs	1,109 lbs	*1,142 lbs	897 lbs
					1,197 lbs	1,109 lbs	968 lbs	897 lbs
6.6					*1,453 lbs	1,074 lbs	*1,105 lbs	767 lbs
					1,160 lbs	1,074 lbs	829 lbs	767 lbs
3.3			*2,445 lbs	1,548 lbs	*1,744 lbs	1,016 lbs	*1,149 lbs	723 lbs
			1,689 lbs	1,548 lbs	1,107 lbs	1,016 lbs	783 lbs	723 lbs
0	*2,504 lbs	*2,504 lbs	*2,504 lbs	1,451 lbs	*1,967 lbs	970 lbs	*1,287 lbs	741 lbs
	*2,504 lbs	*2,504 lbs	1,590 lbs	1,451 lbs	1,054 lbs	970 lbs	802 lbs	741 lbs
-3.3	*4,566 lbs	2,687 lbs	*2,965 lbs	1,429 lbs	*1958 lbs	957 lbs	*1,612 lbs	840 lbs
	3,023 lbs	2,687 lbs	1,567 lbs	1,429 lbs	1,041 lbs	957 lbs	910 lbs	840 lbs
-6.6	*4,065 lbs	2,769 lbs	*2,388 lbs	1,468 lbs			*1,656 lbs	1,142 lbs
	3,111 lbs	2,769 lbs	1,607 lbs	1,468 lbs			1,241 lbs	1,142 lbs

In the interest of continual equipment development, SANY America Inc. reserves the right to change these specifications at any time without prior notification.
©2026 SANY America Inc. HEXPS26SY35U001

sanyamerica.com ||| SY35U

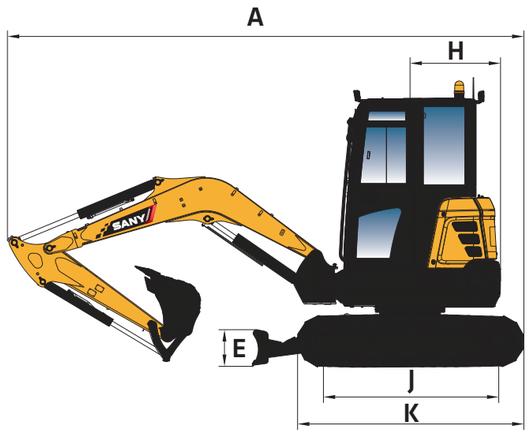

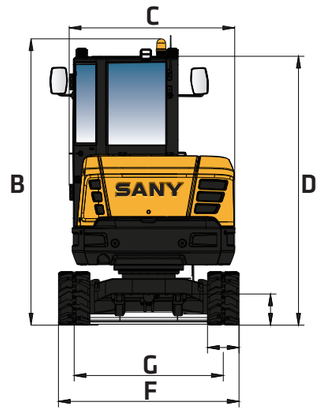

DIMENSIONS		STANDARD STICK	LONG STICK
	Boom Length	8' 4"	8' 4"
	Stick (Arm) Length	4' 7"	5' 5"
A	Transport Length	16' 1"	16'
B	Transport Height	8' 5"	8' 5"
C	Upper Structure Width	5' 1"	
D	Cab Height	6' 6"	
E	Blade Height	14"	
F	Track Width	5' 8"	
G	Track Gauge	4' 8"	
H	Tail Swing Radius	12"	
I	Ground Clearance	2' 10"	
J	Track Length on Ground	5' 6"	
K	Track Length	7' 1"	

SERVICE REFILL CAPACITIES	
Fuel Tank Capacity	13.21 gal
Hydraulic Tank Capacity	10.57 gal
Engine Oil Capacity	1.77 gal
Cooling System Capacity	1.00 gal

In the interest of continual equipment development, SANY America Inc. reserves the right to change these specifications at any time without prior notification.
©2026 SANY America Inc. HEXPS26SY35U001

INDUSTRY'S STRONGEST STANDARD WARRANTY | 5-YEAR* 5,000 HOURS

*Warranty applies to 2026 Excavator and Wheel Loader models

SANY America Inc. 318 SANY Way
Peachtree City, Georgia 30269
470.552.SANY sanyamerica.com

CONNECTED, **INFORMED**, IN CONTROL
TECHNOLOGY

CONNECTED EVI TELEMATICS

EVI is SANY's proprietary telematics platform and is available through your local dealer on excavators. This dashboard lets you track and geofence the machine, view reports on consumption and run time, monitor error codes and manage your SANY fleet—all with more features continually being launched to keep you connected and in control.

ATTACHMENT CONTROL

The SY35U's in-cab display includes preset attachment profiles and allows selection of one-way or two-way flow and continuous flow adjustments. Operators can fine-tune settings on the fly to maintain control and maximize performance.

INFORMATION AT YOUR FINGERTIPS

The multifunction display is the operator's hub, showing key machine metrics like fuel, engine and hydraulic temperatures, service codes and more. It also allows quick adjustment of HVAC, and radio while also supporting Bluetooth hands-free calling, and operator presets—all in one easy-to-use central command center..



BUILT **AROUND THE**
OPERATOR



CUSTOM OPERATOR ERGONOMICS

The adjustable seat gives operators complete control over their seating position—height, and distance—so they can align perfectly with the joysticks and foot pedals. This precise adjustability supports better control and a more comfortable working posture all day long.

OPTIMAL JOBSITE AWARENESS

Large glass panels, sliding side window, and integrated give operators a clear view of their surroundings. With added surround-view mirrors, they can confidently and safely control the machine on the jobsite.

5
POINTS
of seat adjustablity.

DESIGNED FOR **COMFORT**
ALL SHIFT LONG

This spacious cab is built for comfort and intuitiveness with safety and ergonomics at the core. The seat offers 5 adjustment points to achieve the ideal position for all-day comfort. SANY's E-panel places common functions within easy reach and the multifunction display serves as the control hub. Upgraded HVAC keeps the cab comfortable in any weather, while Bluetooth connectivity and improved noise isolation allow clear hands-free calls. Large glass panels maximize visibility of the work area, helping operators stay comfortable and productive throughout the shift.

INTENTIONALLY **ENGINEERED FOR SERVICE**

UPTIME IS OUR PRIORITY

With fast diagnostics, streamlined repairs and software tools for remote support it's easy to keep your SANY excavator running strong. Our local dealer network, stretching across North America, provides quick response and maximizes your productivity.

DEDICATED TO SUPPORT

We're expanding our U.S. footprint with local engineering, quality assurance and service teams—backed by a multi-year investment in support, training, and parts.

EASE OF ACCESS

Its spacious compartments offer ample room for tools, filters, and components, ensuring efficient inspections and replacements that minimize downtime on the job site.

FAST DAILY PRE-CHECKS

Machines are designed so operators can safely and easily inspect critical systems—mostly from the ground—for quick visual and manual checks.

PARTS ON THE SHELF READY TO SHIP

We continually expand parts inventory across our major North American distribution centers and improve forecasting to keep high-demand components in stock. This longterm strategy ensures critical parts are ready to ship when they're needed most.





#1 FASTEST GROWING
support network in North America.



15% MORE
engine compartment space than previous generation machines.

WE'VE GOT **YOUR BACK**

At SANY, we see every customer as a relationship whose success is directly tied to ours. We focus on keeping you productive, because when your machines are running, your business is winning. Our warranty support, faster claim approvals are built to protect your operations not just your equipment. Your feedback fuels continuous improvement—real updates to software, hydraulics, and performance through close collaboration with key suppliers. With expanding U.S. support, trained technicians, ongoing investments, and stronger parts availability, we stay by your side so your business can keep moving forward.

CUSTOMERS FIRST ALWAYS



At SANY America, everything begins with you. We design machines that make your work safer, more efficient, and more profitable—and we stand behind them with U.S.-based support you can count on. From ergonomic cabs and superior visibility to quick daily checks and dependable uptime, every feature is engineered around real operator needs and real jobsite demands. Your feedback directly drives our product improvements, accelerating software updates, hydraulic refinements, and long-term durability enhancements. With expanding American facilities, local engineering and service teams, certified technicians, and three parts distribution centers nationwide, we operate as your committed business partner—focused on your success today and every day ahead.

INDUSTRY'S **STRONGEST** STANDARD WARRANTY

SANY America delivers the most comprehensive standard warranty in the industry—protecting your investment from day one.

- **5 years / 5,000 hours of full machine coverage included with every excavator**
- **Lower total operating risk and fewer unexpected costs over machine life**
- **Confidence in long-term durability backed by factory engineering and testing**
- **Stronger coverage than leading OEM competitors – standard, not add-on**

Choosing SANY means choosing equipment built to work—and a partner committed to standing behind your success.

FINANCING THAT WORKS AS HARD AS YOU DO

Smart financing that makes owning SANY equipment faster, easier, and affordable.

- **Quick approvals – many customers approved in under 5 minutes**
- **Simple mobile app for secure document signing and easy payment management**
- **Flexible terms and competitive promotions, including 0% for 60 months**
- **Faster approvals for repeat customers to keep your fleet growing**
- **Top-rated experience with a 4.95 out of 5 Trustpilot score**

Financing with SANY is built to support your business growth every step of the way.

TOTAL COST OF OWNERSHIP

SANY machines are engineered to deliver a stronger return on investment by lowering the true cost of ownership over the life of your equipment.

- **Fuel-efficient performance reduces operating costs every hour the machine runs**
- **Extended service intervals minimize downtime and maintenance expense**
- **Parts cost management keeps replacement and wear items affordable**
- **High resale value helps protect your investment over time**
- **More standard features from the factory reduce the need for costly add-ons**

Every detail is designed to help you earn more, spend less, and get maximum value from every machine you own.



SANY America Inc.
318 SANY Way
Peachtree City | GA 30269
T | 470-552-SANY

BRHEX26SY35U001

sanyamerica.com

In the interest of continual equipment development, SANY America Inc. reserves the right to change these specifications at any time without prior notification.

© 2026 SANY America Inc.